MODEL	STOCK CODE	MINIMUM TORQUE AT RATED CURRENT (Nm)	RATED CURRENT (mA)	RESISTANCE ±10% @ 25°C (ohms)	VOLTAGE (Vdc)	NOMINAL POWER (watts)	MAXIMUM SPEED (RPM)	KINETIC POWER RATINGS		DE-ENERGIZED DRAG TORQUE @ 1000 RPM (Nm)	EXTERNAL INERTIA ($kg\ cm^2$)	TORQUE TO INERTIA RATIO (rad/s^2)
								5 MINUTE (watts)	CONTINUOUS (watts)			
CHB-12	006918	12.36	500	52	26	13	6,000	1,200	350	9.18×10^{-2}	6.25×10^{1}	2,070
13 Nm IS ATTAINABLE @ APPROXIMATELY 600 mA												

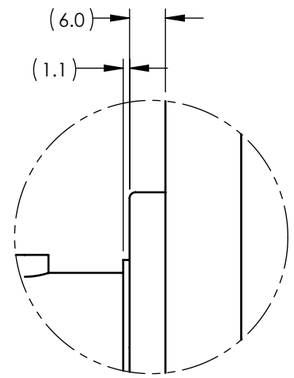

DETAIL A
SCALE 1 : 1

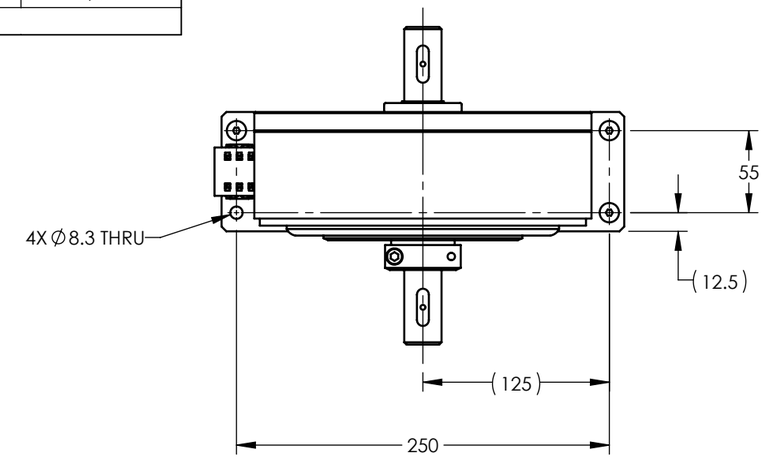

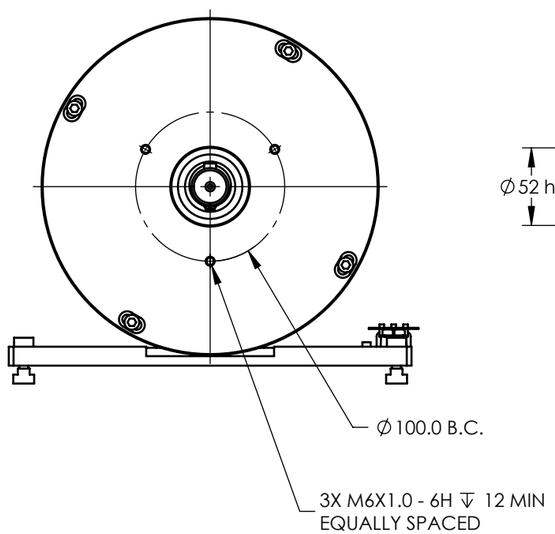

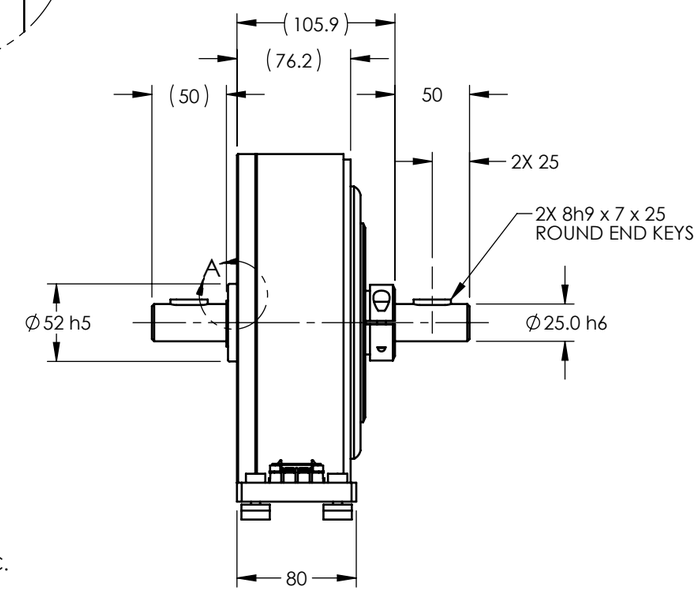

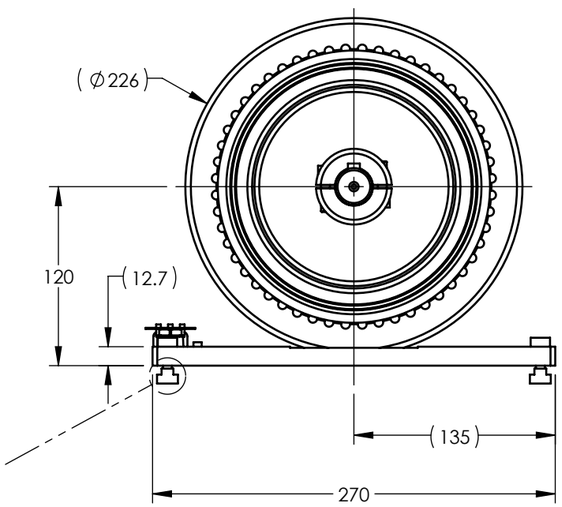

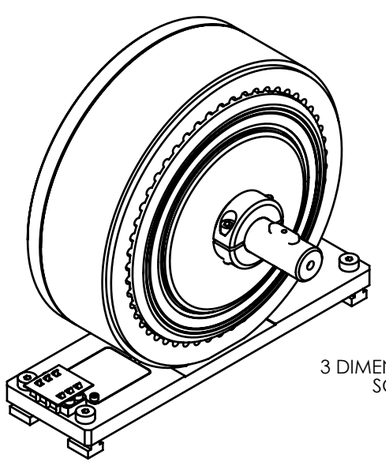

3 DIMENSIONAL VIEW
SCALE 1:4

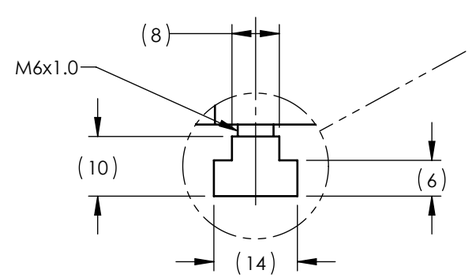

T-NUT DETAIL
SCALE 1 : 1

MATERIAL: -

FINISH: -

THIRD ANGLE PROJECTION

THIS DRAWING AND SPECIFICATION CONTAINS PROPRIETARY INFORMATION TO MAGTROL INC. ANY DISCLOSURE OR REPRODUCTION OF THIS DOCUMENT WITHOUT WRITTEN AUTHORIZATION FROM MAGTROL INC. IS EXPRESSLY PROHIBITED

DESIGN	JEF	09/20/2012
DRAWN	JEF	09/20/2012
CHECKED	DTW	09/26/2012

UNLESS OTHERWISE SPECIFIED:
DIMENSIONS ARE IN MILLIMETERS
DIAMETERS CONCENTRIC: .08 TIR
FACES PERPENDICULAR: .08
INTERPRETATION PER ASME Y14.5M-1994
REMOVE ALL BURRS AND BREAK SHARP EDGES 0.13/0.25 X 45°
INSIDE CORNERS TO BE R 0.5 MAX
TOLERANCES:
.X ± .25 X ± .4
.XX ± .13 X° ± 1°
SURFACE FINISH 3.2 µm MAX

MAGTROL INC.
70 GARDENVILLE PKWY, W.
BUFFALO, NEW YORK 14224-1322

TITLE:
HYSTERESIS BRAKE, BASE MOUNTED, 12Nm

USED ON: -
SIMILAR TO: HB-1750M, AHB-12

DWG NO: CHB-12i
REV C

SIZE B | SCALE 1:4 | SHEET # 1 OF 1