THE INFORMATION DISCLOSED HEREIN WAS ORIGINATED BY AND IS THE PROPERTY OF MAGTROL SA. MAGTROL SA RESERVES ALL PATENT PROPRIETARY, DESIGN, USE, SALE, MANUFACTURING AND REPRODUCTION RIGHTS THERETO.

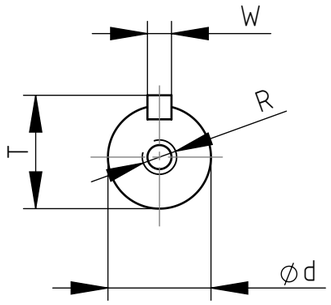

Axis body

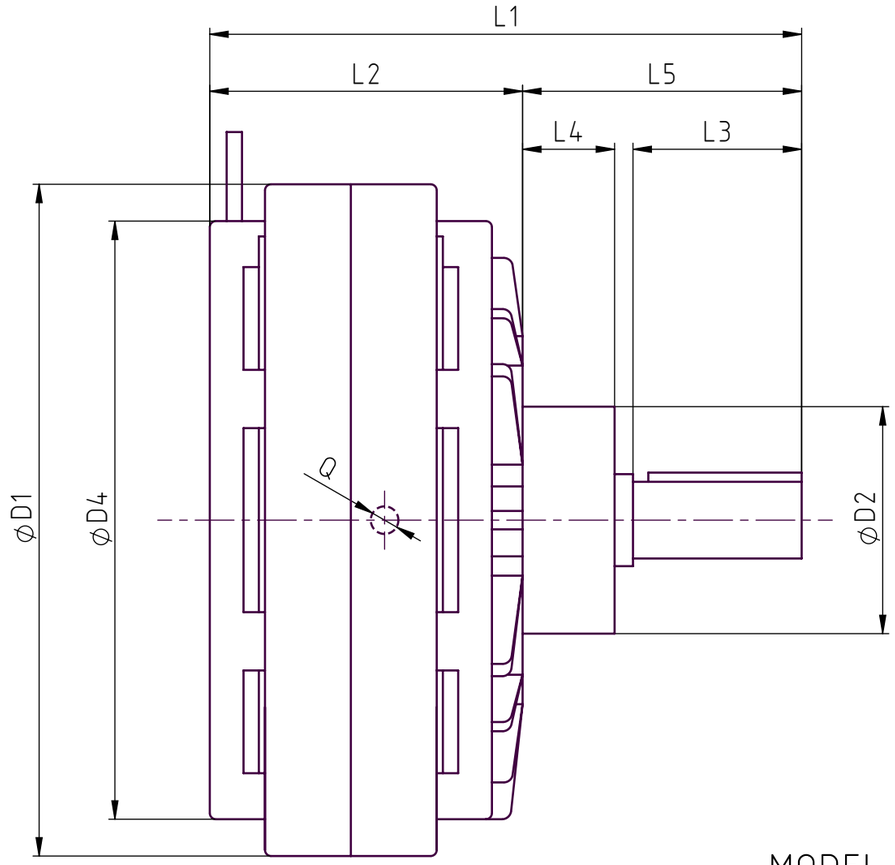

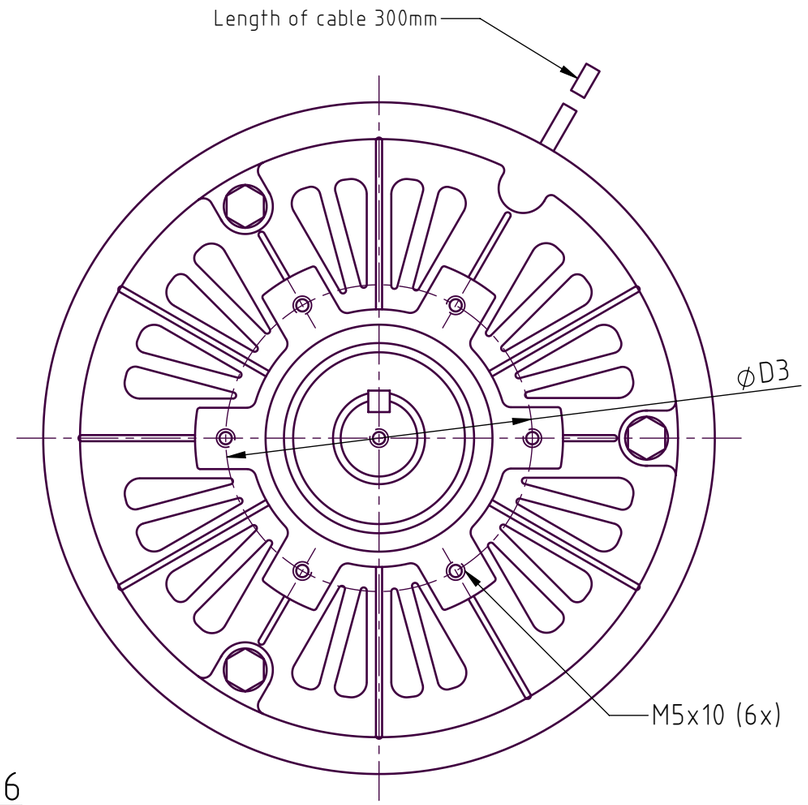

MODEL 006

Type	L1	L2	L3	L4	L5	D1	D2 (g7)	D3	D4	Q (inch)	R	Axis body		
												d(h7)	W (p7)	T(0/-0.2)
TPB 006	114	68	26	14	46	134	42	64	116	1/8	M4x8	12	4	13.5

Type	Fix torque (Nm)	Capability (75°C)		Inertial torque (kg m²)	Weight (kg)	Max. speed of rotation (tr/min)
		Electric (A)	Electric Power (W)			
TPB 006	6	0.81	19.4	$6x10^{-4}$	3.7	1'800

Rev.	Date	PM	Drawn	Appr.	
6	.	.	.	.	.
5	.	.	.	.	.
4	.	.	.	.	.
3	.	.	.	.	.
2	.	.	.	.	.
1	.	.	.	.	.

Repl. by : .
Repl. for: .

Tolerances: ± . mm to 50mm, ± . mm over 50mm

Material: .

Finish: .

MAGTROL

Scale			
1:2	Drawn	29.11.2019	ajoy
	Checked	.	.
	Approved	29.11.2019	blot

Powder Brake without feet

TPB xxx

DRAWING N°

954-25-03-0000V