THE INFORMATION DISCLOSED HEREIN WAS ORIGINATED BY AND IS THE PROPERTY OF MAGTROL SA. MAGTROL SA RESERVES ALL PATENT PROPRIETARY, DESIGN, USE, SALE, MANUFACTURING AND REPRODUCTION RIGHTS THERETO.

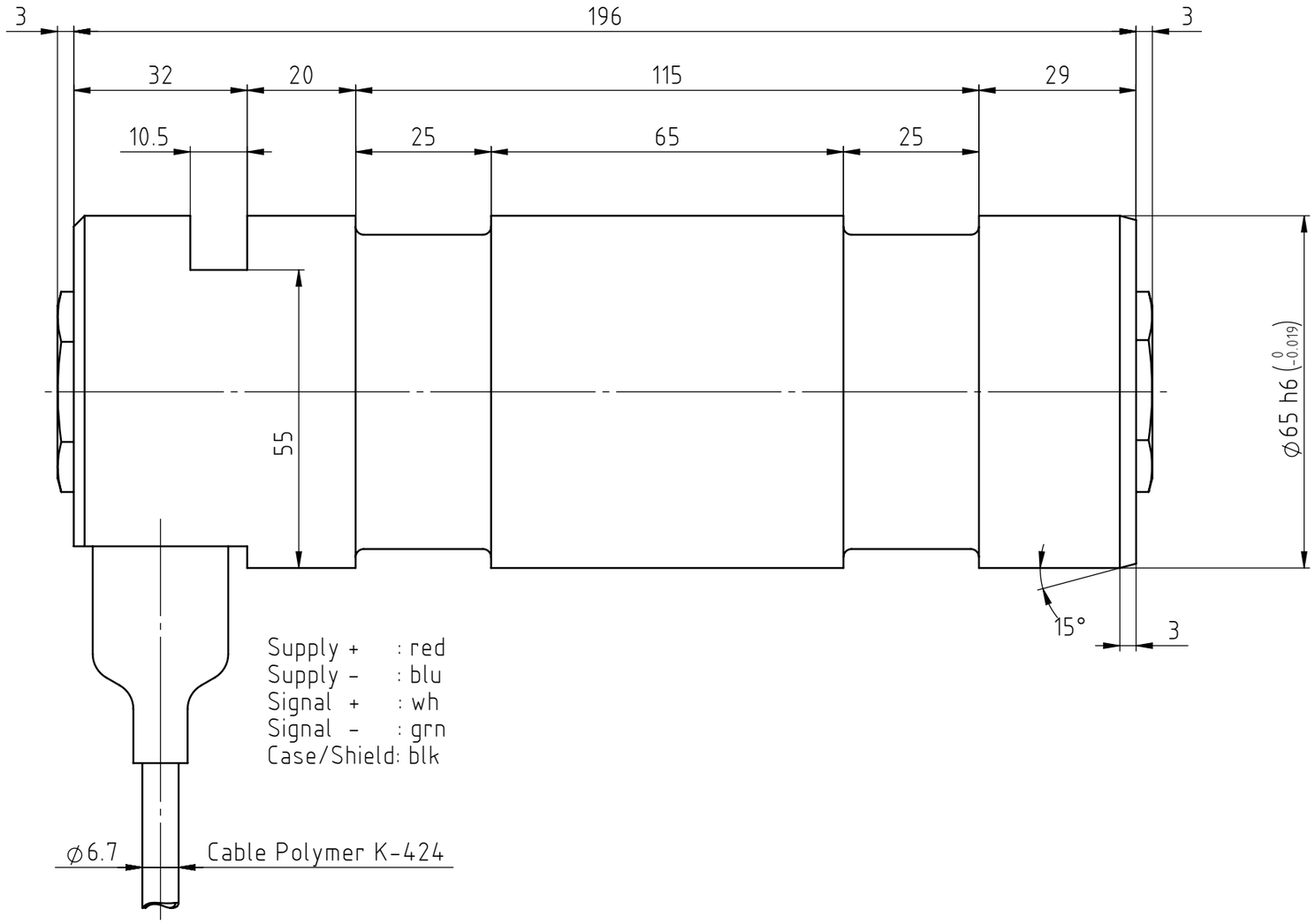

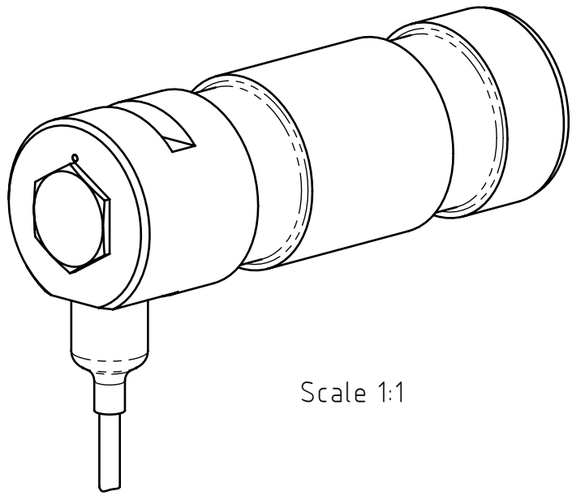

Scale 1:1

Sensitivity 1mV/V

P/N	CABLE LENGTH
122-217/011/001	3m
122-217/011/002	6m
122-217/011/003	12m
122-217/011/004	20m

Rev.	Date	PM	Drawn	Appr.	Repl. by : . / Repl. for: .
6	.	.	.	.	.
5	.	.	.	.	.
4	.	.	.	.	.
3	.	.	.	.	.
2	.	.	.	.	.
1	.	.	.	.	.

Tolerances: ± . mm to 50mm, ± . mm over 50mm

Material: 1.4057

Finish: .

MAGTROL

Scale			
1:1	Drawn	03.12.2024	ajoy
	Checked	.	.
	Approved	03.12.2024	ygre

LOAD MEASURING PIN 200kN

P/N: 122-217/011/00X | Type: LB 217

DRAWING N°

122-217-011V00X