MODEL	STOCK CODE	MINIMUM TORQUE AT RATED CURRENT (Nm)	RATED CURRENT (mA)	RESISTANCE ±10% @ 25°C (ohms)	VOLTAGE (Vdc)	NOMINAL POWER (watts)	MAXIMUM SPEED (RPM)	KINETIC POWER RATINGS		DE-ENERGIZED DRAG TORQUE @ 1000 RPM (Nm)	EXTERNAL INERTIA ($kg\ cm^2$)	TORQUE TO INERTIA RATIO (rad/s^2)
								5 MINUTE (watts)	CONTINUOUS (watts)			
CHB-24	006919	24.72	1000	26	26	26	6,000	2,400	600	1.36×10^{-1}	1.25×10^{2}	2,070

SOLID MODEL AVAILABLE

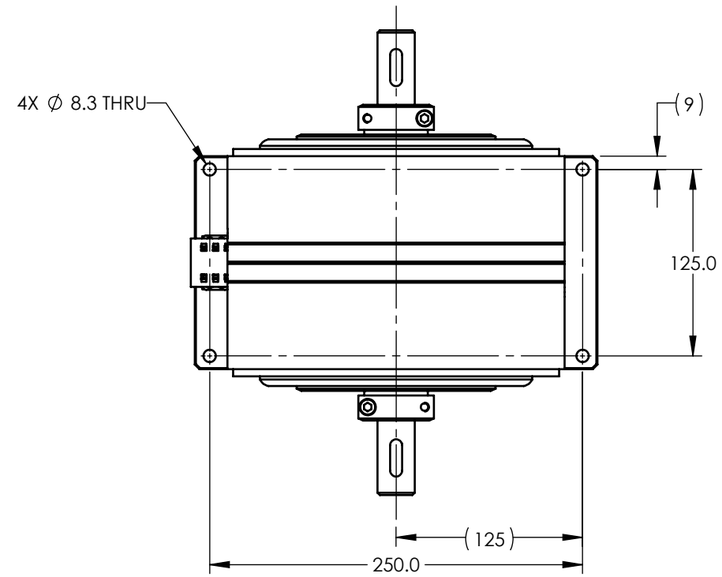

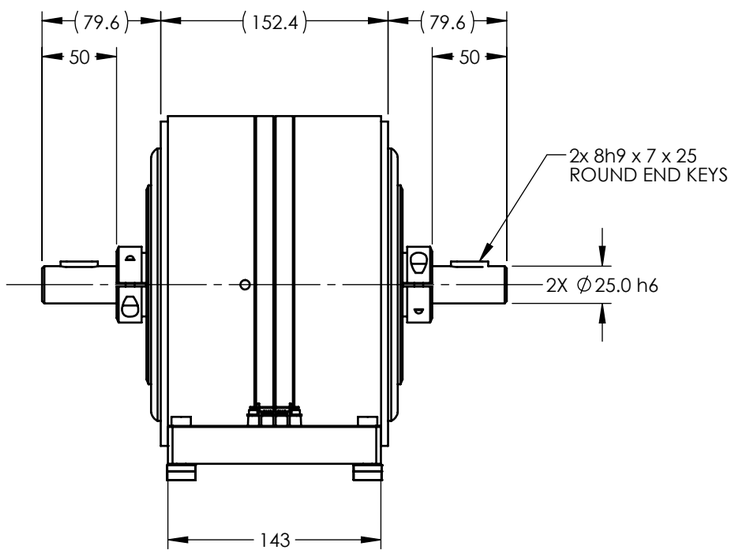

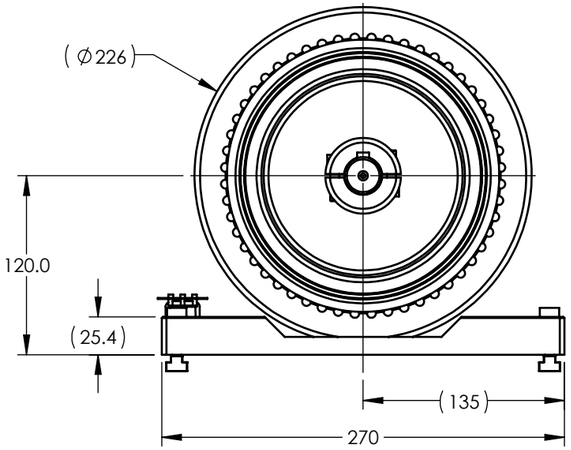

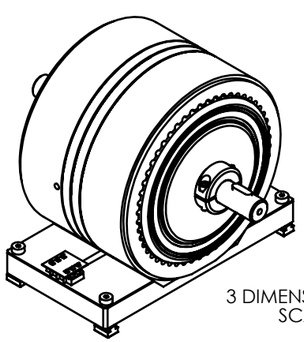

3 DIMENSIONAL VIEW
SCALE 1:6

MATERIAL: -

FINISH: -

THIRD ANGLE PROJECTION

THIS DRAWING AND SPECIFICATION CONTAINS PROPRIETARY INFORMATION TO MAGTROL INC. ANY DISCLOSURE OR REPRODUCTION OF THIS DOCUMENT WITHOUT WRITTEN AUTHORIZATION FROM MAGTROL INC. IS EXPRESSLY PROHIBITED

DESIGN	JEF	09/20/12
DRAWN	JEF	09/24/12
CHECKED	DTW	09/26/12

UNLESS OTHERWISE SPECIFIED:
DIMENSIONS ARE IN INCHES
DIAMETERS CONCENTRIC: .003 TIR
FACES PERPENDICULAR: .003
INTERPRETATION PER ASME Y14.5M-1994
REMOVE ALL BURRS AND BREAK SHARP EDGES .005/.010 X 45°
INSIDE CORNERS TO BE R .02 MAX
TOLERANCES:
.XX ± .01 X/Y ± 1/64"
.XXX ± .005 X° ± 1°
SURFACE FINISH 125 RMS MAX

MAGTROL INC.
70 GARDENVILLE PKWY, W.
BUFFALO, NEW YORK 14224-1322

TITLE: HYSTERESIS BRAKE, BASE MOUNTED, 24Nm

USED ON: -
SIMILAR TO: -

DWG NO: CHB-24 REV B

SIZE B | SCALE 1:6 | SHEET # 3 OF 3