MODEL	STOCK CODE	MINIMUM TORQUE AT RATED CURRENT (Nm)	RATED CURRENT (mA)	RESISTANCE ±10% @ 25°C (ohms)	VOLTAGE (Vdc)	NOMINAL POWER (watts)	MAXIMUM SPEED (RPM)	KINETIC POWER RATINGS		DE-ENERGIZED DRAG TORQUE @ 1000 RPM (Nm)	EXTERNAL INERTIA ($kg\ cm\ s^2$)	TORQUE TO INERTIA RATIO (rad/s^2)
								5 MINUTE (watts)	CONTINUOUS (watts)			
CHB-1	007231	1.0	253	95	24	6.1	12,000	300	75	5.42×10^{-3}	1.00	9,620

SOLID MODEL AVAILABLE

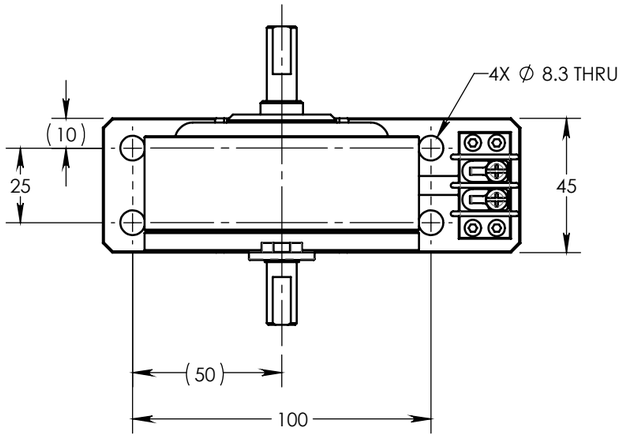

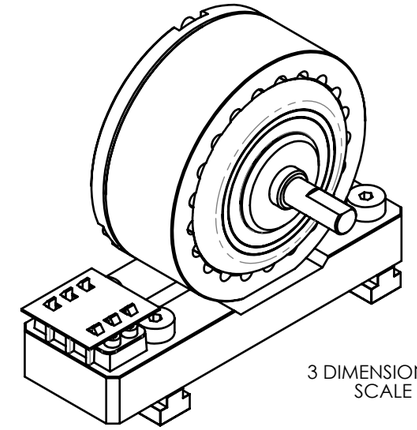

3 DIMENSIONAL VIEW
SCALE 1 : 2

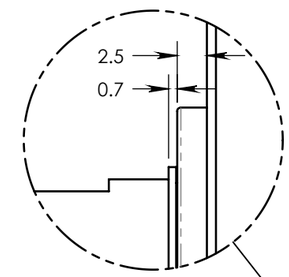

DETAIL B
SCALE 2 : 1

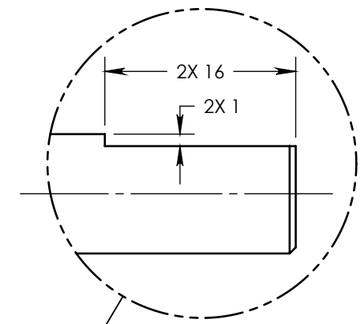

DETAIL A
SCALE 2 : 1

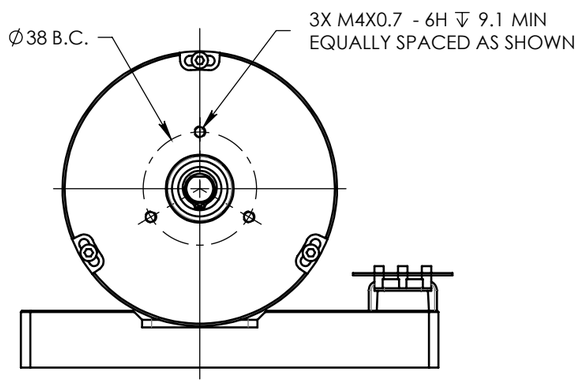

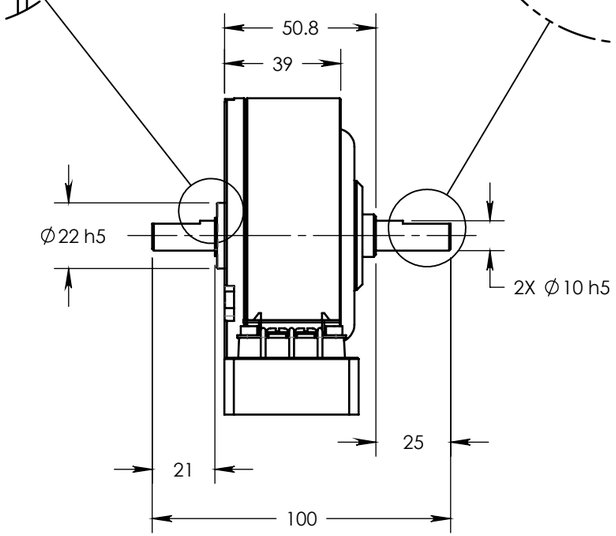

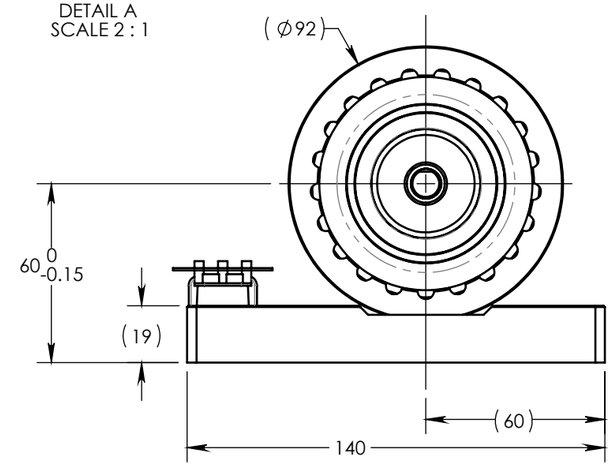

INSTALLATION DRAWING

MATERIAL: -	DESIGN	AJC	06/02/15
	DRAWN	AJC	06/02/15
FINISH: -	CHECKED	JEF	06/02/15

THIRD ANGLE PROJECTION

THIS DRAWING AND SPECIFICATION CONTAINS PROPRIETARY INFORMATION TO MAGTROL INC. ANY DISCLOSURE OR REPRODUCTION OF THIS DOCUMENT WITHOUT WRITTEN AUTHORIZATION FROM MAGTROL INC. IS EXPRESSLY PROHIBITED

UNLESS OTHERWISE SPECIFIED:
DIMENSIONS ARE IN MILLIMETERS
DIAMETERS CONCENTRIC: 0.08 TIR
FACES PERPENDICULAR: 0.08
INTERPRETATION PER ASME Y14.5M-1994
REMOVE ALL BURRS AND BREAK SHARP EDGES 0.13/0.25 X 45°
INSIDE CORNERS TO BE R 0.5 MAX
TOLERANCES:
X ± 0.4 X.XX ± 0.13
X.X ± 0.25 ANG ± 1°
SURFACE FINISH 3.2 µm MAX

MAGTROL INC.
70 GARDENVILLE PKWY, W.
BUFFALO, NEW YORK 14224-1322

TITLE:
CONVECTION COOLED HYSTERESIS BRAKE, METRIC

USED ON: -
SIMILAR TO: -

DWG NO: CHB-1
REV -

SIZE B
SCALE 1:2