THE INFORMATION DISCLOSED HEREIN WAS ORIGINATED BY AND IS THE PROPERTY OF MAGTROL SA. MAGTROL SA RESERVES ALL PATENT PROPRIETARY, DESIGN, USE, SALE, MANUFACTURING AND REPRODUCTION RIGHTS THERETO.

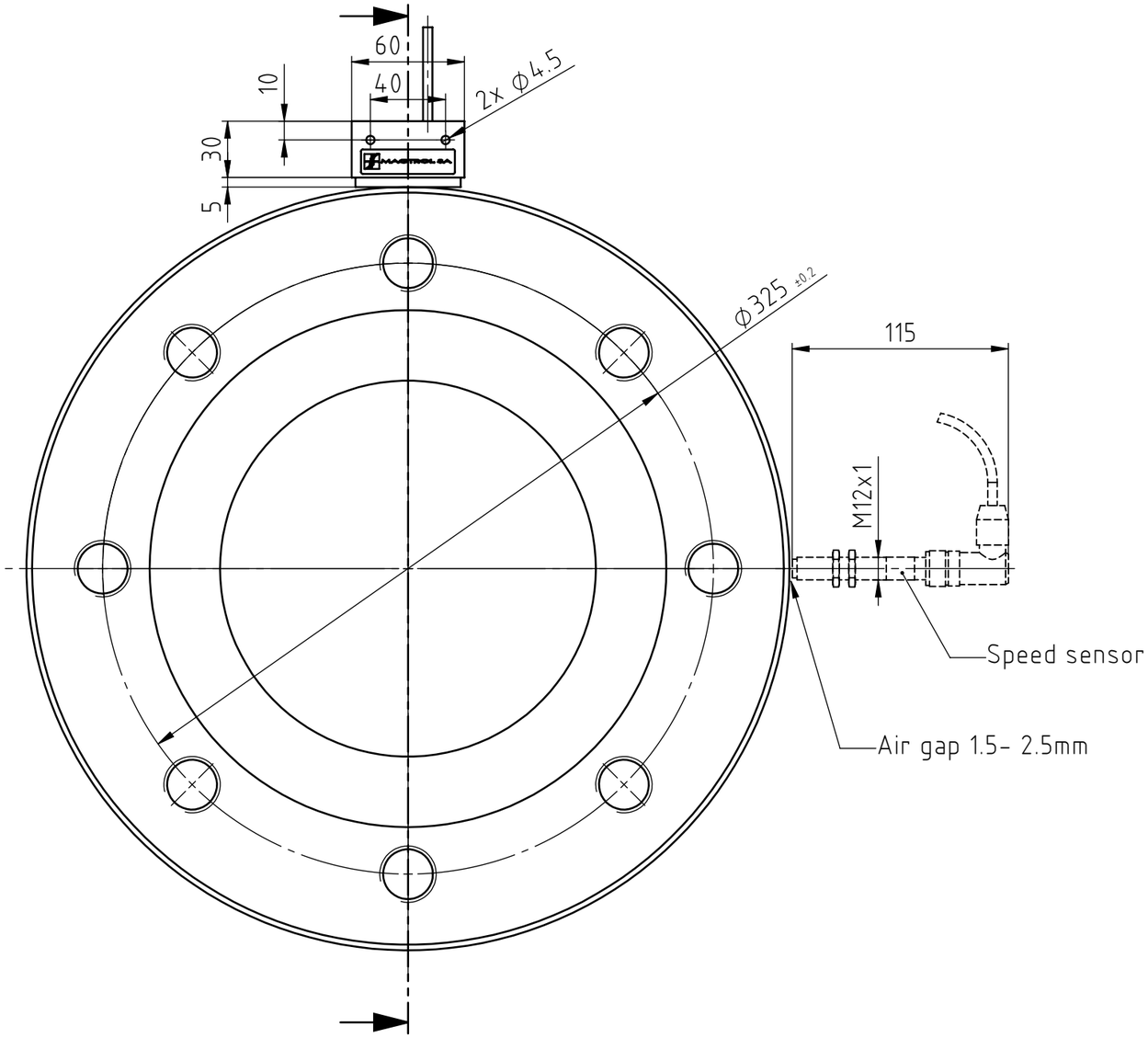

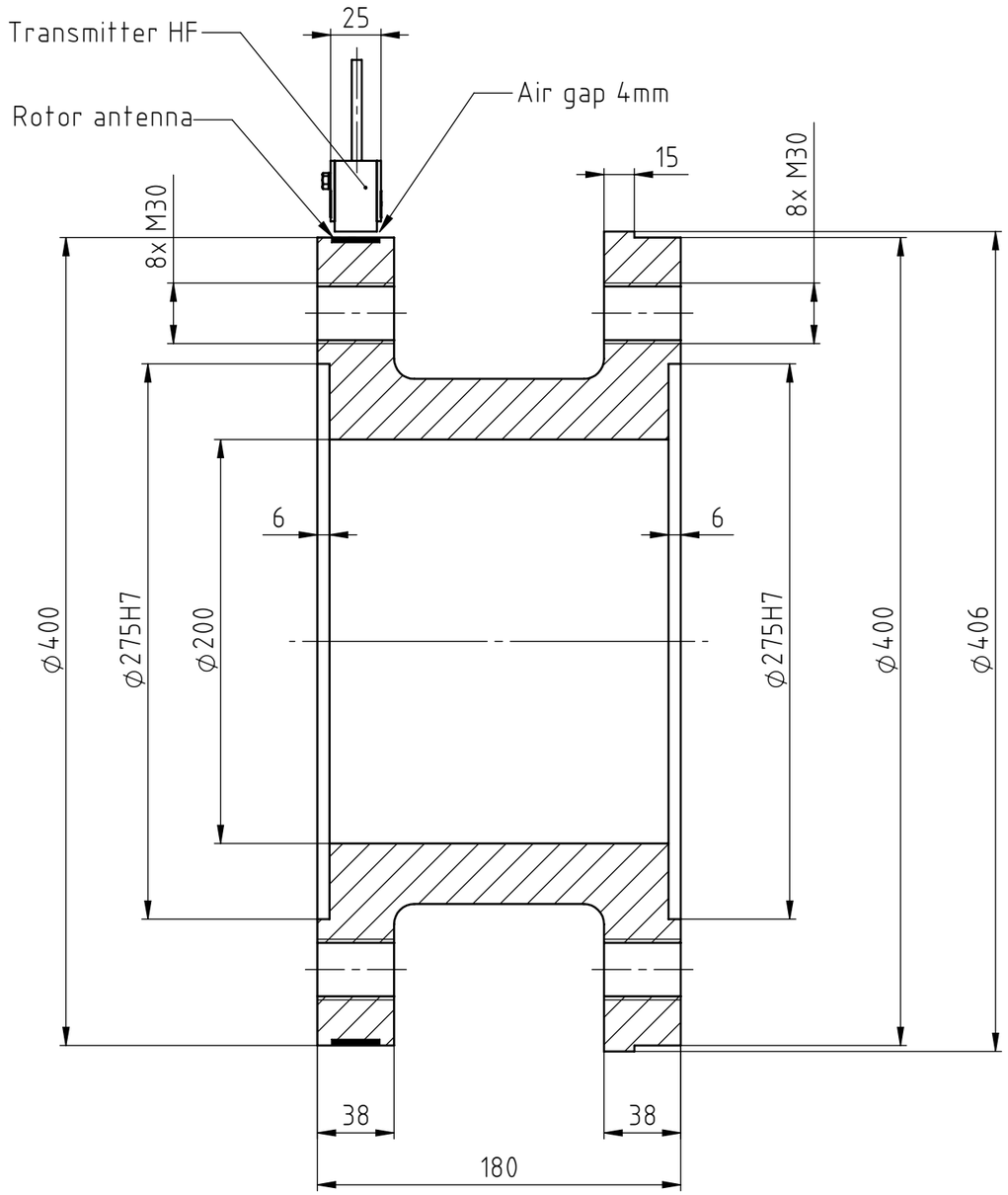

Error of linearity:	0.25%
Maximum torque:	200% of nominal (TF318) 180% of nominal (TF319)
Maximum speed:	3'500 rpm
Sensitivity:	0.7mV/V
Strain gauge bridge:	700Ω
Rated temperature range:	+10°C to + 85°C
Storage temperature range:	-25°C to + 85°C
Protection class:	IP42

Rev.	Date	PM	Drawn	Appr.	Repl. by : . / Repl. for: .
6	.	.	.	.	.
5	.	.	.	.	.
4	.	.	.	.	.
3	.	.	.	.	.
2	.	.	.	.	.
1	.	.	.	.	.

Tolerances: ± . mm to 50mm, ± . mm over 50mm

Material: .

Finish: .

MAGTROL SA SWITZERLAND

Scale			
1:3	Drawn	06.01.16	blot
	Checked	.	.
	Approved	06.01.16	acot

TF318 (20KNm), TF319 (50kNm)

Torque sensor TF300

DRAWING N°

425-318-000V011